19x26.5cm

SEC/SH/03/21/BT1

ATHENS BREAKFAST BAR SET

IMPORTANT
FOR DOMESTIC USE ONLY
PLEASE READ BEFORE YOU CONTINUE FURTHER

THE PRODUCT YOU HAVE PURCHASED WILL GIVE YOU MANY YEARS OF SERVICE IF YOU FOLLOW THE GUIDELINES FOR ITS SAFE ASSEMBLY AND PERIODIC MAINTENANCE AND CLEANING.

ASSEMBLE ON A SOFT CLEAN SURFACE.

DO NOT USE ANY TOOLS OTHER THAN THOSE SHOWN.

ANY SPANNERS OR ALLEN KEYS REQUIRED ARE INCLUDED WITH THE FITTINGS KIT.

DO NOT FOR ANY REASON USE A POWER TOOL TO ASSEMBLE THIS PRODUCT. ITS USE WILL INVALIDATE ANY CLAIM YOU MAY HAVE AND COULD MAKE THIS PRODUCT UNSAFE.

DEPENDING ON THE AMOUNT OF USE THIS PRODUCT RECEIVES IT MAY BE NECESSARY TO TIGHTEN UP THE FIXINGS FROM TIME TO TIME. THIS IS COMPLETELY NORMAL FOR ANY FLAT PACK FURNITURE. DO NOT OVERTIGHTEN FIXINGS.

FOR CLEANING, YOU MAY USE A DAMP CLOTH (NOT WET}.

THE SURFACE OF THIS ITEM IS NOT HEAT RESISTANT. ALWAYS USE A PLACE MAT UNDER HOT OR COLD ITEMS TO PREVENT MARKING.

19x26.5cm

PARTS

PLEASE CHECK T HAT YOU HAVE ALL THE PARTS LISTED BEFORE YOU START ASSEMBLING. IF YOU DO FIND THAT SOMETHING IS MISSING, DO NOT CONTINUE ASSEMBLY. PLEASE CONTACT YOUR SUPPLIER IMMEDIATELY.

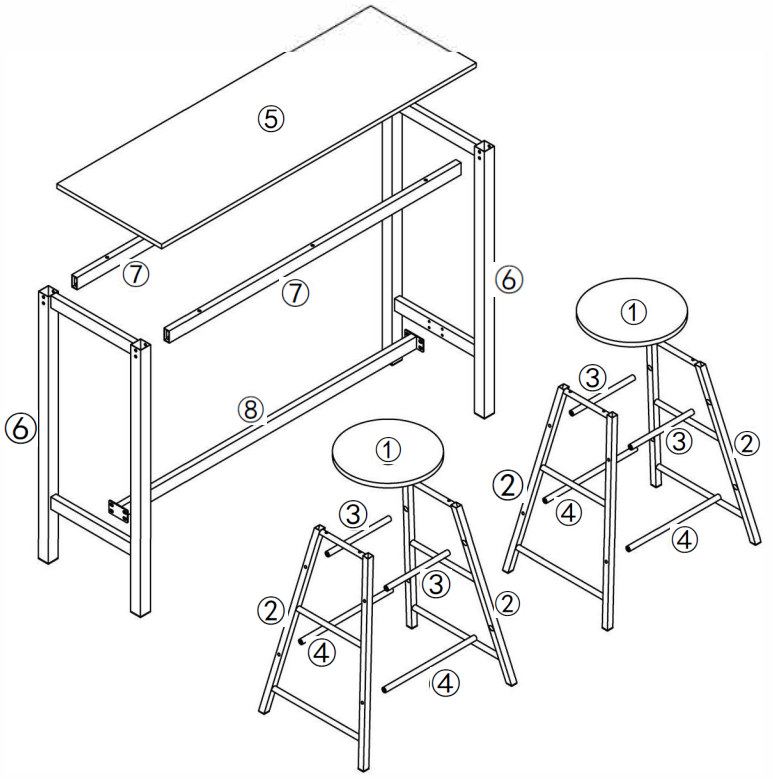

PARTS LIST

1	SEATPAD	2PCS
2	CHAIR LEG	4PCS
3	CHAIR CROSSBAR SHORT	4PCS
4	CHAIR CROSSBAR LONG	4PCS
5	TABLE TOP	1PC
6	TABLE LEG	2PCS
7	TABLE TOP CROSSBAR	2PCS
8	TABLE BOTTOM CROSSBAR	1PC

HARDWARE LIST

A		M6*12	8PCS
B		M6*25mm ALLEN	24PCS
C		M6*50	6PCS
D		M6*60mm ALLEN	8PCS
E		ALLEN KEY	1PC

THE USE OF POWER TOOLS TO ASSEMBLE THIS PRODUCT WILL INVALIDATE ANY CLAIM AND MAY DAMAGE THIS PRODUCT MAKING IT UNSAFE.

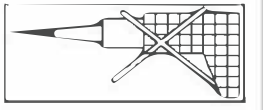

19x26.5cm

STEP 1

YOU WILL NEED:-		
A		8PCS
D		8PCS
E		1PC

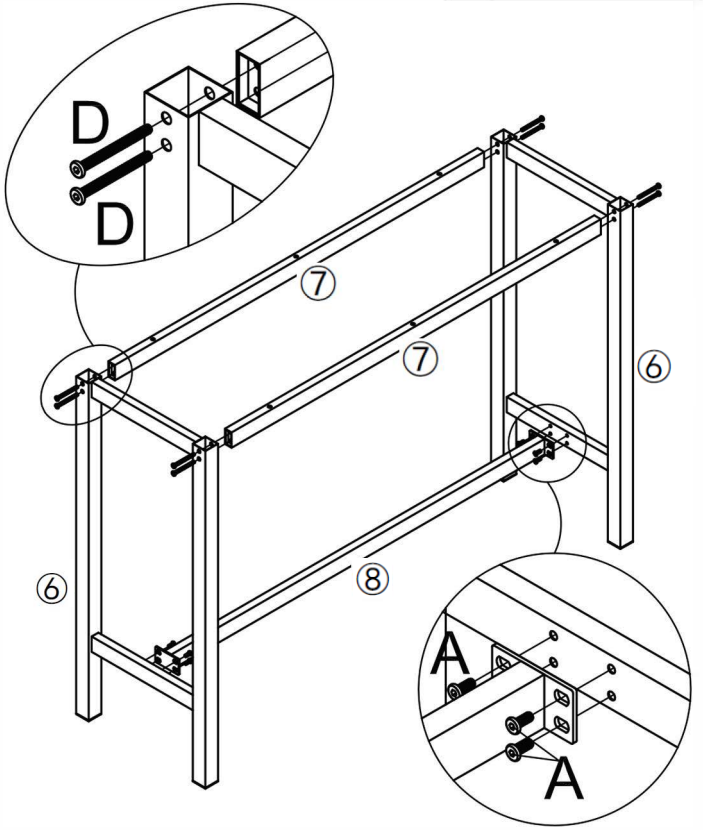

STEP 2

YOU WILL NEED:-		
C		6PCS
E		1PC

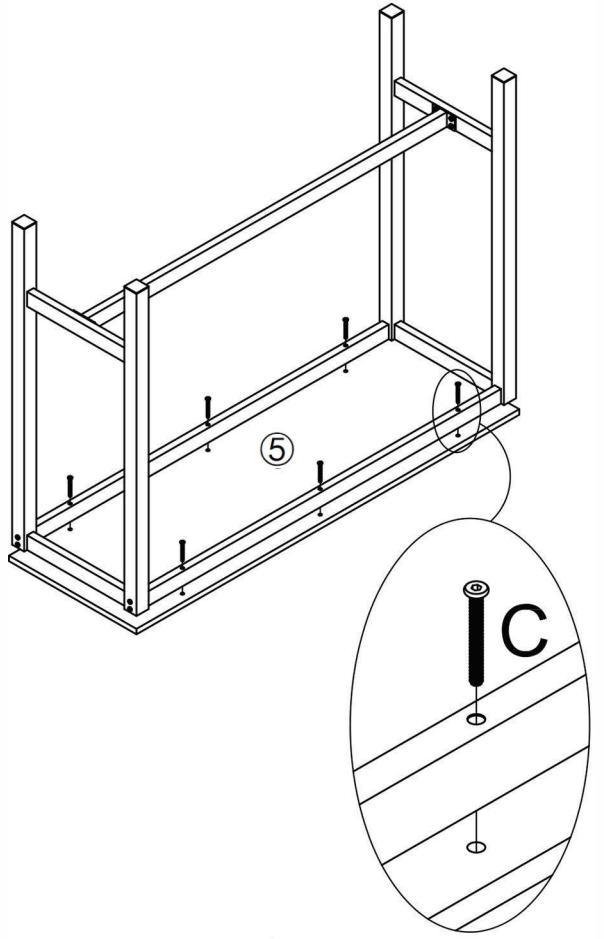

THE USE OF POWER TOOLS TO ASSEMBLE THIS PRODUCT WILL INVALIDATE ANY CLAIM AND MAY DAMAGE THIS PRODUCT MAKING IT UNSAFE.

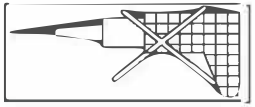

19x26.5cm

SEC/SH/03/21/BT1

STEP 1

YOU WILL NEED:-		
B		16PCS
E		1PC

x 2

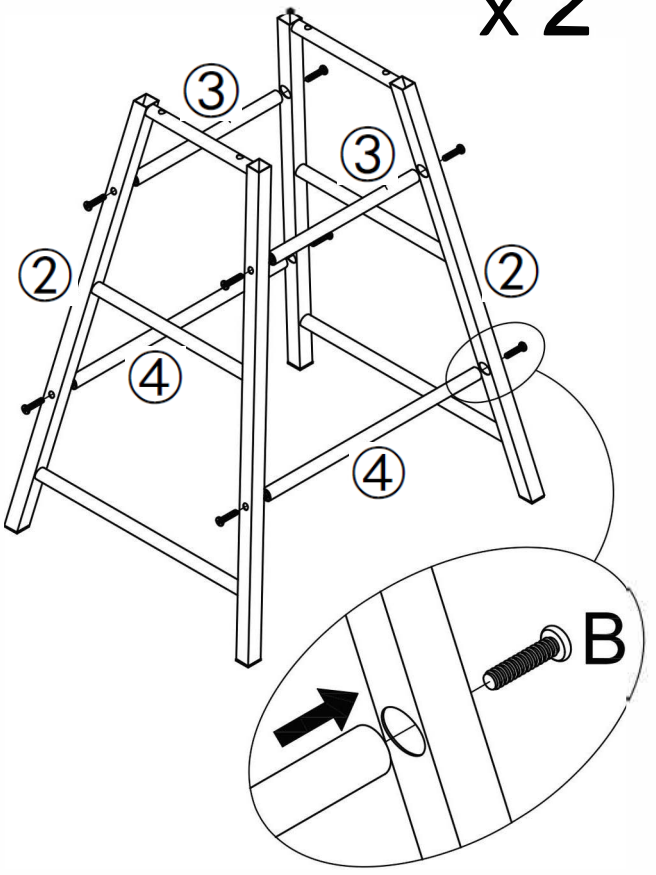

STEP 2

YOU WILL NEED:-		
B		8PCS
E		1PC

x 2

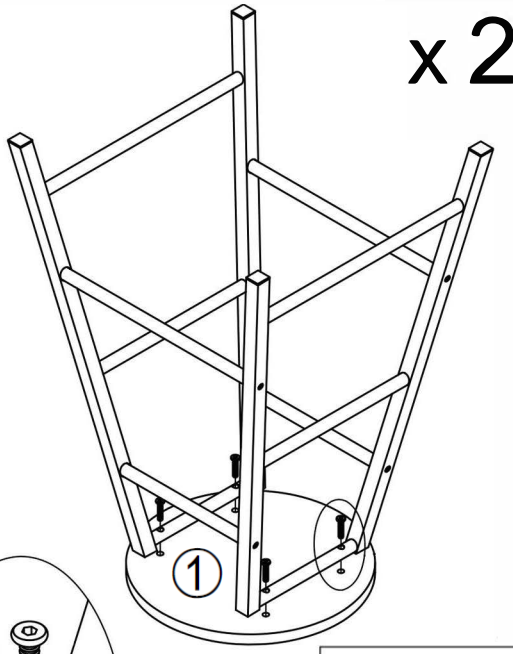

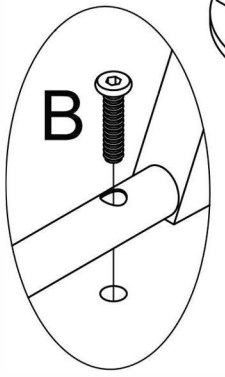

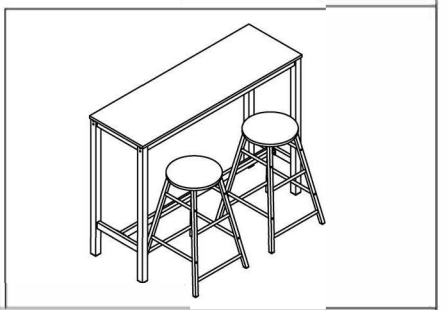
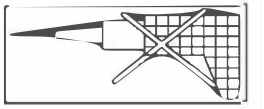
THE USE OF POWER TOOLS TO ASSEMBLE THIS PRODUCT WILL INVALIDATE ANY CLAIM AND MAY DAMAGE THIS PRODUCT MAKING IT UNSAFE.